Loyal | NA 6918

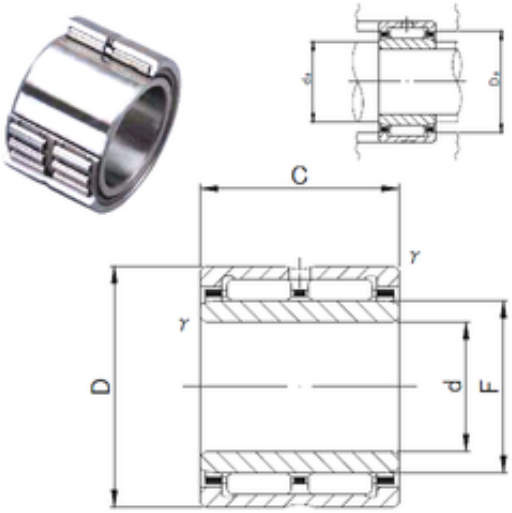

Bearing No. NA 6918

B	63 mm
d	90 mm
F	105 mm
D	125 mm
C	63 mm
da max	103 mm
Weight	2,46 Kg
r min.	1,1 mm
Da max.	118,5 mm
da min.	96,5 mm
Size (mm)	90x125x63
Width (mm)	63
Bearing number	NA 6918
Bore Diameter (mm)	90
Outer Diameter (mm)	125
Basic dynamic load rating (C)	177,5 kN
Basic static load rating (C0)	490,3 kN