Loyal | 29244

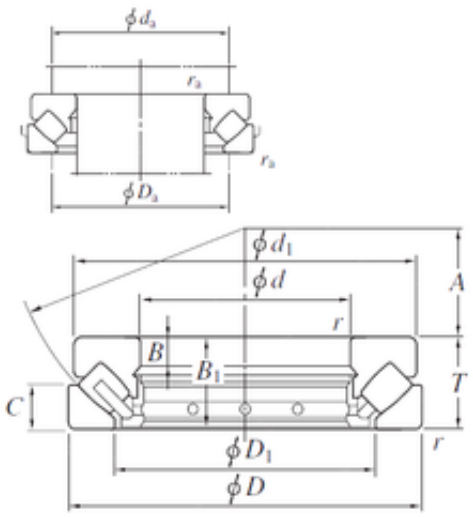

Bearing No. 29244

A	117 mm
C	24 mm
B	15 mm
d	220 mm
D	300 mm
T	48 mm
D1	254 mm
Ca	670
B1	45 mm
d1	292 mm
Coa	2340
r min.	2 mm
Weight	100 Kg
r(min)	2
Da(max)	275
da min.	260 mm
Da max.	275 mm
ra max.	2 mm
da(min)	260
ra(max)	2
Oil lub.	1550
Size (mm)	220x300x48
Width (mm)	48
Bearing No.	29244
Bearing number	29244
(Refer.)Mass(kg)	10.0
Bore Diameter (mm)	220
Outer Diameter (mm)	300
Basic dynamic load rating (C)	536 kN