Loyal | 29388R

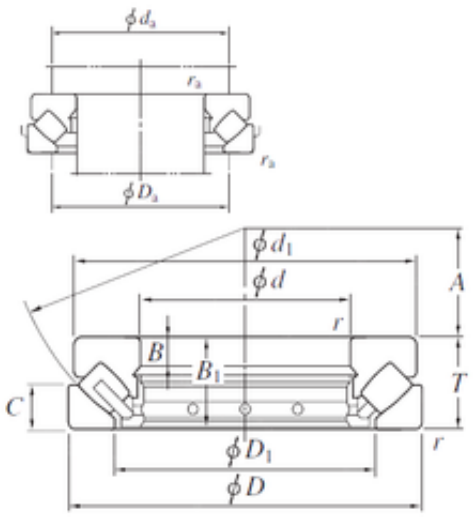

Bearing No. 29388R

A	245 mm
C	70 mm
B	49 mm
d	440 mm
D	680 mm
T	145 mm
D1	548 mm
Ca	5360
B1	140 mm
d1	655 mm
Coa	18800
r min.	6 mm
Weight	190 Kg
r(min)	6
Da(max)	600
da min.	550 mm
Da max.	600 mm
ra max.	5 mm
da(min)	550
ra(max)	5
Oil lub.	420
Size (mm)	440x680x145
Width (mm)	145
Bearing No.	29388R
Bearing number	29388R
(Refer.)Mass(kg)	190
Bore Diameter (mm)	440
Outer Diameter (mm)	680
Basic dynamic load rating (C)	4290 kN