Loyal | SIJ12

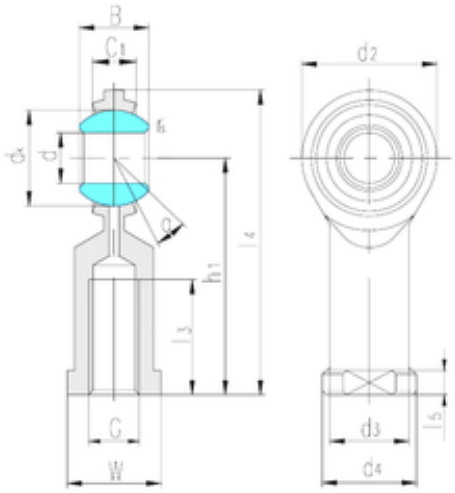

Bearing No. SIJ12

d	12 mm
B	16 mm
W	19 mm
d2	30 mm
d3	17,5 mm
d4	22 mm
dk	22,225 mm
h1	50 mm
l5	6,5 mm
C1	12 mm
Angle	13 °
Weight	0,089 Kg
r min.	0,3 mm
l3 min.	24 mm
l4 max.	65 mm
Thread (G)	M12
Bearing number	SIJ12
Bore Diameter (mm)	12
Basic dynamic load rating (C)	8,5 kN