Loyal | SIJ20

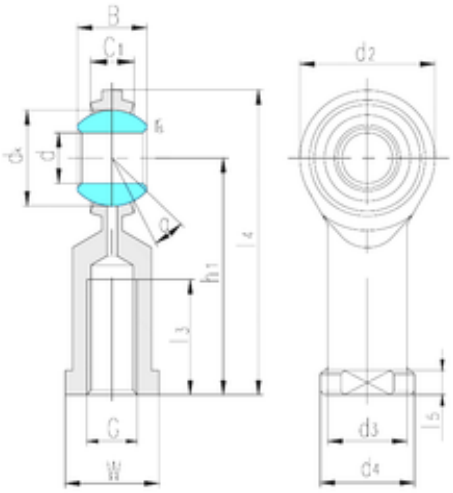

Bearing No. SIJ20

d	20 mm
B	25 mm
W	30 mm
d2	46 mm
d3	27,5 mm
d4	34 mm
dk	34,925 mm
h1	77 mm
l5	10 mm
C1	18 mm
Angle	14 °
Weight	0,314 Kg
r min.	0,6 mm
l3 min.	40 mm
l4 max.	100 mm
Thread (G)	M20×1,5
Bearing number	SIJ20
Bore Diameter (mm)	20
Basic dynamic load rating (C)	23 kN