Loyal | 29422R

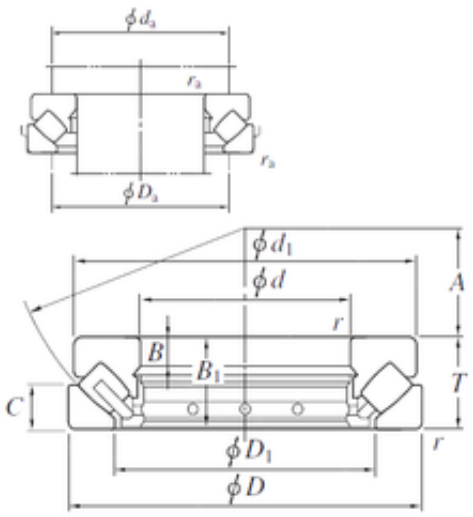

Bearing No. 29422R

A	69 mm
C	35 mm
B	26 mm
d	110 mm
D	230 mm
T	73 mm
D1	162 mm
Ca	1120
B1	69 mm
d1	220 mm
Coa	2810
r min.	3 mm
Weight	147 Kg
r(min)	3
Da(max)	190
da min.	165 mm
Da max.	190 mm
ra max.	25 mm
da(min)	165
ra(max)	2.5
Oil lub.	1500
Size (mm)	110x230x73
Width (mm)	73
Bearing No.	29422R
Bearing number	29422R
(Refer.)Mass(kg)	14.7
Bore Diameter (mm)	110
Outer Diameter (mm)	230
Basic dynamic load rating (C)	896 kN