Loyal | SAK20C

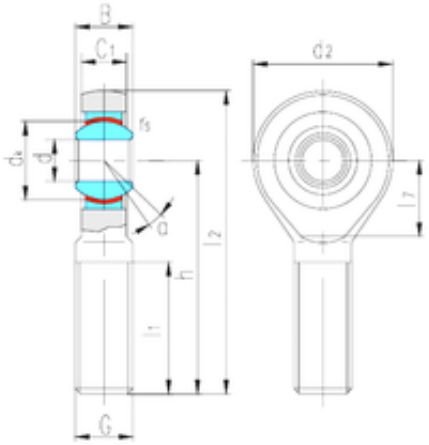

Bearing No. SAK20C

d	20 mm
B	25 mm
h	78 mm
d2	50 mm
dk	34,93 mm
C1	18,5 mm
Angle	14 °
r min.	0,6 mm
Weight	0,4 Kg
l1 min.	45 mm
l2 max.	103 mm
l7 min.	27,5 mm
Thread (G)	M20×1,5
Bearing number	SAK20C
Bore Diameter (mm)	20
Basic dynamic load rating (C)	34 kN