Loyal | UK211+H2311

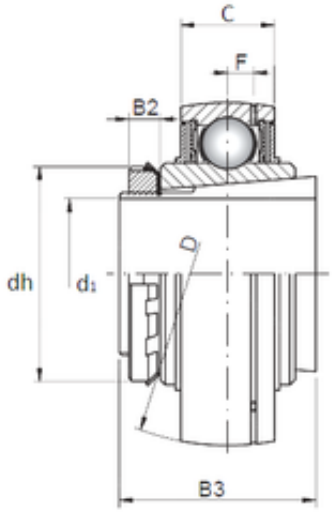

Bearing No. UK211+H2311

d	55 mm
D	100 mm
B	35 mm
C	25 mm
F	7 mm
d1	50 mm
B2	12 mm
B3	59 mm
dh	75 mm
Size (mm)	55x100x35
Width (mm)	35
Bearing number	UK211+H2311
Bore Diameter (mm)	55
Outer Diameter (mm)	100