Loyal | PHS 12EC

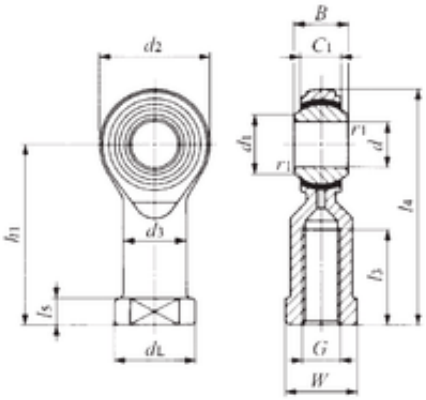

Bearing No. PHS 12EC

d	12 mm
B	16 mm
W	19 mm
d3	17,5 mm
L4	65 mm
L5	6,5 mm
dL	22 mm
L3	24 mm
d1	15,4 mm
d2	30 mm
dk	22,225 mm
h1	50 mm
C1	12 mm
Weight	0,107 Kg
r1 min.	0,2 mm
Thread (G)	M12×1,75
Bearing number	PHS 12EC
Bore Diameter (mm)	12
Basic dynamic load rating (C)	26,2 kN