Loyal | LHSA 10

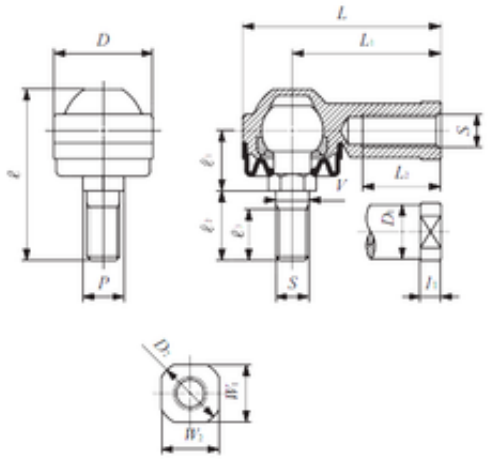

Bearing No. LHSA 10

V	10 mm
P	12 mm
?	49 Tolerance h14
D	28 mm
L	57 mm
dk	19,05 mm
L1	43 mm
W1	17 mm
W2	17 mm
?1	16 mm
?2	21 mm
?3	17 mm
L2	23 mm
D1	15 mm
D2	19 mm
Weight	106 Kg
l1 min.	6,5 mm
Thread (G)	M10 × 1,25
Bearing number	LHSA 10